TOPFET high side switch PiP3209-R

DESCRIPTION

Monolithic single channel high side protected power switch in **TOPFET2** technology assembled in a 5 pin plastic surface mount package.

APPLICATIONS

General controller for driving lamps, motors, solenoids, heaters.

QUICK REFERENCE DATA

SYMBOL	PARAMETER	MIN.	UNIT
I_L	Nominal load current (ISO)	2	A

SYMBOL	PARAMETER	MAX.	UNIT
V_{BG}	Continuous off-state supply voltage	50	V
I_L	Continuous load current	6	A
T_j	Continuous junction temperature	150	˚C
R_{ON}	On-state resistance T_j = 25˚C	180	mΩ

FEATURES

- Vertical power TrenchMOS
- Low on-state resistance
- CMOS logic compatible
- Very low quiescent current
- Overtemperature protection
- Load current limiting
- Latched overload and short circuit protection
- Overvoltage and undervoltage shutdown with hysteresis
- On-state open circuit load detection
- Diagnostic status indication
- Voltage clamping for turn off of inductive loads
- ESD protection on all pins
- Reverse battery, overvoltage and transient protection

FUNCTIONAL BLOCK DIAGRAM

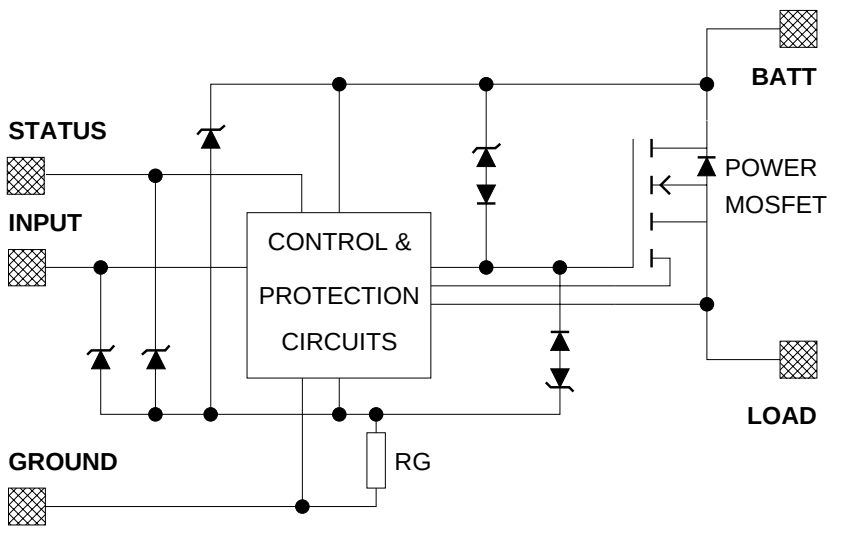

Fig.1. Elements of the TOPFET HSS with internal ground resistor.

PINNING - SOT426

PIN	DESCRIPTION
1	**G**round
2	**I**nput
3	(connected to mb)
4	**S**tatus
5	**L**oad
mb	**B**attery

PIN CONFIGURATION

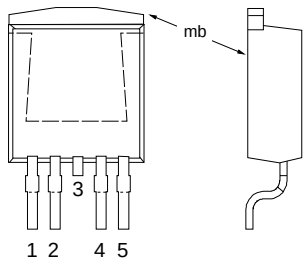

Fig. 2.

SYMBOL

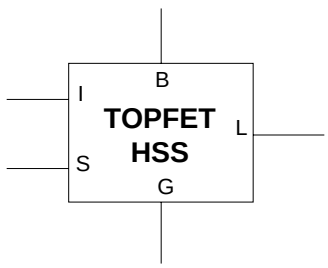

Fig. 3.

LIMITING VALUES

Limiting values in accordance with the Absolute Maximum System (IEC 134)

SYMBOL	PARAMETER	CONDITIONS	MIN.	MAX.	UNIT
V_{BG}	Continuous supply voltage		0	50	V
I_L	Continuous load current	$T_{mb} \leq 114^{\circ}C$	-	6	A
P_D	Total power dissipation	$T_{mb} \leq 25^{\circ}C$	-	41	W
T_{stg}	Storage temperature		-55	175	°C
T_j	Continuous junction temperature[1]		-	150	°C
T_{sold}	Mounting base temperature	during soldering	-	260	°C
	Reverse battery voltages[2]				
$-V_{BG}$	Continuous reverse voltage		-	16	V
$-V_{BG}$	Peak reverse voltage		-	32	V
	Application information				
R_I, R_S	External resistors[3]	to limit input, status currents	3.2	-	kΩ
	Input and status				
I_I, I_S	Continuous currents		-5	5	mA
I_I, I_S	Repetitive peak currents	$\delta \leq 0.1$, tp = 300 µs	-50	50	mA
	Inductive load clamping	I_L = 1 A, V_{BG} = 16 V			
E_{BL}	Non-repetitive clamping energy	T_j = 150°C prior to turn-off	-	75	mJ

ESD LIMITING VALUE

SYMBOL	PARAMETER	CONDITIONS	MIN.	MAX.	UNIT
V_C	Electrostatic discharge capacitor voltage	Human body model; C = 250 pF; R = 1.5 kΩ	-	2	kV

THERMAL CHARACTERISTICS

SYMBOL	PARAMETER	CONDITIONS	MIN.	TYP.	MAX.	UNIT
	Thermal resistance[4]					
$R_{th\ j\text{-}mb}$	Junction to mounting base	-	-	2.5	3	K/W

1 For normal continuous operation. A higher T_j is allowed as an overload condition but at the threshold $T_{j(TO)}$ the over temperature trip operates to protect the switch.

2 Reverse battery voltage is allowed only with external resistors to limit the input and status currents to a safe value. The connected load must limit the reverse load current. The internal ground resistor limits the reverse battery ground current. Power is dissipated and the T_j rating must be observed.

3 To limit currents during reverse battery and transient overvoltages (positive or negative).

4 Of the output power MOS transistor.

STATIC CHARACTERISTICS

Limits are at -40˚C ≤ T_{mb} ≤ 150˚C and typicals at T_{mb} = 25 ˚C unless otherwise stated.

SYMBOL	PARAMETER	CONDITIONS				MIN.	TYP.	MAX.	UNIT
	Clamping voltages								
V_{BG}	Battery to ground	I_G = 1 mA				50	55	65	V
V_{BL}	Battery to load	$I_L = I_G$ = 1 mA				50	55	65	V
$-V_{LG}$	Negative load to ground	I_L = 10 mA				18	23	28	V
$-V_{LG}$	Negative load voltage[1]	I_L = 1 A; t_p = 300 µs				20	25	30	V
	Supply voltage	battery to ground							
V_{BG}	Operating range[2]	-				5.5	-	35	V
	Currents	9 V ≤ V_{BG} ≤ 16 V							
I_B	Quiescent current[3]	V_{LG} = 0 V				-	-	20	µA
					T_{mb} = 25˚C	-	0.1	2	µA
I_L	Off-state load current[4]	$V_{BL} = V_{BG}$				-	-	20	µA
					T_{mb} = 25˚C	-	0.1	1	µA
I_G	Operating current[5]	I_L = 0 A				-	2	4	mA
I_L	Nominal load current[6]	V_{BL} = 0.5 V				2	-	-	A
	Resistances	V_{BG}	I_L	t_p	T_{mb}				
R_{ON}	On-state resistance[7]	9 to 35 V	1 A	300 µs	25˚C	-	135	180	mΩ
					150˚C	-	-	330	mΩ
R_{ON}	On-state resistance	6 V	1 A	300 µs	25˚C	-	170	225	mΩ
					150˚C	-	-	410	mΩ
R_G	Internal ground resistance	I_G = 10 mA				95	150	190	Ω

1 For a high side switch, the load pin voltage goes negative with respect to ground during the turn-off of an inductive load.

2 On-state resistance is increased if the supply voltage is less than 9 V.

3 This is the continuous current drawn from the supply when the input is low and includes leakage current to the load.

4 The measured current is in the load pin only.

5 This is the continuous current drawn from the supply with no load connected, but with the input high.

6 Defined as in ISO 10483-1. For comparison purposes only.

7 The supply and input voltage for the R_{ON} tests are continuous. The specified pulse duration t_p refers only to the applied load current.

INPUT CHARACTERISTICS

9 V ≤ V_{BG} ≤ 16 V. Limits are at -40˚C ≤ T_{mb} ≤ 150˚C and typicals at T_{mb} = 25 ˚C unless otherwise stated.

SYMBOL	PARAMETER	CONDITIONS	MIN.	TYP.	MAX.	UNIT
I_I	Input current	V_{IG} = 5 V	20	90	160	µA
V_{IG}	Input clamping voltage	I_I = 200 µA	5.5	7	8.5	V
$V_{IG(ON)}$	Input turn-on threshold voltage		-	2.4	3	V
$V_{IG(OFF)}$	Input turn-off threshold voltage		1.5	2.1	-	V
ΔV_{IG}	Input turn-on hysteresis		-	0.3	-	V
$I_{I(ON)}$	Input turn-on current	V_{IG} = 3 V	-	-	100	µA
$I_{I(OFF)}$	Input turn-off current	V_{IG} = 1.5 V	10	-	-	µA

STATUS CHARACTERISTICS

The status output is an open drain transistor, and requires an external pull-up circuit to indicate a logic high.
Limits are at -40˚C ≤ T_{mb} ≤ 150˚C and typicals at T_{mb} = 25 ˚C unless otherwise stated. Refer to TRUTH TABLE.

SYMBOL	PARAMETER	CONDITIONS	MIN.	TYP.	MAX.	UNIT
V_{SG}	Status clamping voltage	I_S = 100 µA	5.5	7	8.5	V
V_{SG}	Status low voltage	I_S = 100 µA	-	-	1	V
		T_{mb} = 25˚C	-	0.7	0.8	V
I_S	Status leakage current	V_{SG} = 5 V	-	-	15	µA
		T_{mb} = 25˚C	-	0.1	1	µA
I_S	Status saturation current[1]	V_{SG} = 5 V	2	7	12	mA
	Application information					
R_S	External pull-up resistor		-	47	-	kΩ

OPEN CIRCUIT DETECTION CHARACTERISTICS

An open circuit load can be detected in the on-state. Refer to TRUTH TABLE.
Limits are at -40˚C ≤ T_{mb} ≤ 150˚C and typical is at T_{mb} = 25 ˚C.

SYMBOL	PARAMETER	CONDITIONS	MIN.	TYP.	MAX.	UNIT
	Open circuit detection	9 V ≤ V_{BG} ≤ 35 V				
$I_{L(TO)}$	Low current detect threshold		50	-	340	mA
		T_j = 25˚C	85	170	255	mA
$\Delta I_{L(TO)}$	Hysteresis		-	30	-	mA

1 In a fault condition with the pull-up resistor short circuited while the status transistor is conducting. This condition should be avoided in order to prevent possible interference with normal operation of the device.

UNDERVOLTAGE & OVERVOLTAGE CHARACTERISTICS

Limits are at -40˚C ≤ T_{mb} ≤ 150˚C and typicals at T_{mb} = 25 ˚C. Refer to TRUTH TABLE.

SYMBOL	PARAMETER	CONDITIONS	MIN.	TYP.	MAX.	UNIT
	Undervoltage					
$V_{BG(UV)}$	Low supply threshold voltage[1]		2	4.2	5.5	V
$\Delta V_{BG(UV)}$	Hysteresis		-	0.5	-	V
	Overvoltage					
$V_{BG(OV)}$	High supply threshold voltage[2]		40	45	50	V
$\Delta V_{BG(OV)}$	Hysteresis		-	1	-	V

TRUTH TABLE

INPUT	ABNORMAL CONDITIONS DETECTED					LOAD OUTPUT	STATUS	DESCRIPTION
	SUPPLY		LOAD					
	UV	OV	LC	SC	OT			
L	X	X	X	X	X	OFF	H	off
H	0	0	0	0	0	ON	H	on & normal
H	0	0	1	0	0	ON	L	on & low current detect
H	1	0	X	X	X	OFF	H	supply undervoltage lockout
H	0	1	X	0	0	OFF	H	supply overvoltage shutdown
H	0	0	0	1	X	OFF	L	SC tripped
H	0	0	0	0	1	OFF	L	OT shutdown[3]

KEY TO ABBREVIATIONS

L	logic low	UV	undervoltage
H	logic high	OV	overvoltage
X	don't care	LC	low current or open circuit load
0	condition not present	SC	short circuit
1	condition present	OT	overtemperature

1 Undervoltage sensor causes the device to switch off and reset.

2 Overvoltage sensor causes the device to switch off to protect its load.

3 The status will continue to indicate OT (even if the input goes low) until the device cools below the reset threshold. Refer to OVERLOAD PROTECTION CHARACTERISTICS.

OVERLOAD PROTECTION CHARACTERISTICS

5.5 V ≤ V_{BG} ≤ 35 V, limits are at -40˚C ≤ T_{mb} ≤ 150˚C and typicals at T_{mb} = 25 ˚C unless otherwise stated.
Refer to TRUTH TABLE.

SYMBOL	PARAMETER	CONDITIONS	MIN.	TYP.	MAX.	UNIT
	Overload protection	V_{BL} = V_{BG}				
$I_{L(lim)}$	Load current limiting	V_{BG} ≥ 9 V	6	9	12	A
	Short circuit load protection					
$V_{BL(TO)}$	Battery load threshold voltage[1]	V_{BG} = 16 V	8	10	12	V
		V_{BG} = 35 V	15	20	25	V
$t_{d\ sc}$	Response time[2]	V_{BL} > $V_{BL(TO)}$	-	180	250	µs
	Overtemperature protection					
$T_{j(TO)}$	Threshold junction temperature[3]		150	170	190	˚C
$\Delta T_{j(TO)}$	Hysteresis		-	10	-	˚C

SWITCHING CHARACTERISTICS

T_{mb} = 25 ˚C, 9 V ≤ V_{BG} ≤ 16 V, for resistive load R_L = 13 Ω.

SYMBOL	PARAMETER	CONDITIONS	MIN.	TYP.	MAX.	UNIT
	During turn-on	to V_{IG} = 5 V				
$t_{d\ on}$	Delay time	to 10% V_L	-	28	40	µs
dV/dt_{on}	Rate of rise of load voltage	30% to 70% V_L	-	0.75	1	V/µs
t_{on}	Total switching time	to 90% V_L	-	60	90	µs
	During turn-off	to V_{IG} = 0 V				
$t_{d\ off}$	Delay time	to 90% V_L	-	36	54	µs
dV/dt_{off}	Rate of fall of load voltage	70% to 30% V_L	-	0.75	1	V/µs
t_{off}	Total switching time	to 10% V_L	-	60	90	µs

CAPACITANCES

T_{mb} = 25 ˚C; f = 1 MHz; V_{IG} = 0 V. *designed in parameters*.

SYMBOL	PARAMETER	CONDITIONS	MIN.	TYP.	MAX.	UNIT
C_{ig}	Input capacitance	V_{BG} = 13 V	-	15	20	pF
C_{bl}	Output capacitance	V_{BL} = 13 V	-	100	140	pF
C_{sg}	Status capacitance	V_{SG} = 5 V	-	11	15	pF

1 The battery to load threshold voltage for short circuit protection is proportional to the battery supply voltage. After short circuit protection has operated, the input voltage must be toggled low for the switch to resume normal operation.

2 Measured from when the input goes high.

3 After cooling below the reset temperature the switch will resume normal operation.

MECHANICAL DATA

Plastic single-ended surface mounted package (Philips version of D^2-PAK); 5 leads (one lead cropped) **SOT426**

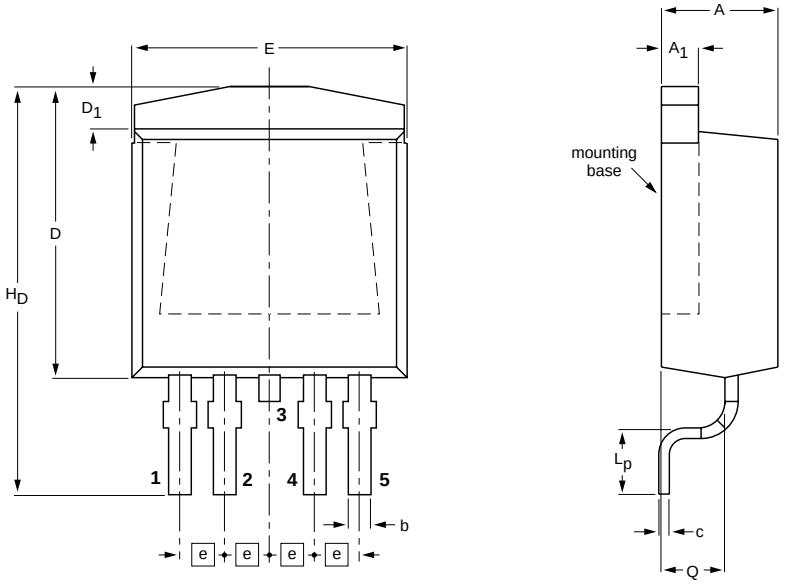

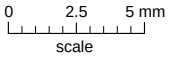

DIMENSIONS (mm are the original dimensions)

UNIT	A	A_1	b	c	D max.	D_1	E	e	L_p	H_D	Q
mm	4.50 4.10	1.40 1.27	0.85 0.60	0.64 0.46	11	1.60 1.20	10.30 9.70	1.70	2.90 2.10	15.80 14.80	2.60 2.20

OUTLINE VERSION	REFERENCES				EUROPEAN PROJECTION	ISSUE DATE
	IEC	JEDEC	EIAJ			
SOT426						~~98-12-14~~ 99-06-25

Fig.4. SOT426 surface mounting package[1], centre pin connected to mounting base.

1 Epoxy meets UL94 V0 at 1/8". Net mass: 1.5 g.
For soldering guidelines and SMD footprint design, please refer to Data Handbook SC18.

DEFINITIONS

DATA SHEET STATUS		
DATA SHEET STATUS[1]	**PRODUCT STATUS**[2]	**DEFINITIONS**
Objective data	Development	This data sheet contains data from the objective specification for product development. Philips Semiconductors reserves the right to change the specification in any manner without notice
Preliminary data	Qualification	This data sheet contains data from the preliminary specification. Supplementary data will be published at a later date. Philips Semiconductors reserves the right to change the specification without notice, in ordere to improve the design and supply the best possible product
Product data	Production	This data sheet contains data from the product specification. Philips Semiconductors reserves the right to make changes at any time in order to improve the design, manufacturing and supply. Changes will be communicated according to the Customer Product/Process Change Notification (CPCN) procedure SNW-SQ-650A
Limiting values		
Limiting values are given in accordance with the Absolute Maximum Rating System (IEC 134). Stress above one or more of the limiting values may cause permanent damage to the device. These are stress ratings only and operation of the device at these or at any other conditions above those given in the Characteristics sections of this specification is not implied. Exposure to limiting values for extended periods may affect device reliability.		
Application information		
Where application information is given, it is advisory and does not form part of the specification.		
© **Philips Electronics N.V. 2001**		
All rights are reserved. Reproduction in whole or in part is prohibited without the prior written consent of the copyright owner.		
The information presented in this document does not form part of any quotation or contract, it is believed to be accurate and reliable and may be changed without notice. No liability will be accepted by the publisher for any consequence of its use. Publication thereof does not convey nor imply any license under patent or other industrial or intellectual property rights.		

LIFE SUPPORT APPLICATIONS

These products are not designed for use in life support appliances, devices or systems where malfunction of these products can be reasonably expected to result in personal injury. Philips customers using or selling these products for use in such applications do so at their own risk and agree to fully indemnify Philips for any damages resulting from such improper use or sale.

1 Please consult the most recently issued datasheet before initiating or completing a design.

2 The product status of the device(s) described in this datasheet may have changed since this datasheet was published. The latest information is available on the Internet at URL http://www.semiconductors.philips.com.